1.9LPF / 0.5GPF WALL MOUNT URINAL

☐ **564812** **Top Inlet Wall Mount Urinal**

Product Specs:

- High efficiency urinal
- 1.9Lpf / 0.5Gpf
- Vitreous china
- Washout flush action
- Outlet connection threaded 2" inside NPTF
- Flushing rim
- Mounting hardware supplied
- Extended sides for privacy
- Integral trap
- Available Color : White

Overall Dimensions:

465mm(W) x 350mm(D) x 685mm(H)

18-¼"(W) x 13-¾"(D) x 27"(H)

Compliance Certifications:

Meets or exceeds the following:

- IAPMO cUPC
- US EPA WaterSense

Please note: In order to comply with WaterSense certification this urinal must be used with 1.9Lpf / 0.5Gpf WaterSense labeled flushometer.

- ASME A112.19.2 / CSA B45.1-2008
- ADA Guidelines & ANSI A117.1
- LEED Compliant

Notes:
Flush Valve is not included and must be ordered separately. Provide suitable reinforcement for all wall supports.Important: Dimensions of fixtures are nominal and may vary within the range of tolerances established by ANSI standard A112.19.2. These measurements are subject to change or cancellation. No responsibility is assumed for use of superseded or voided pages.

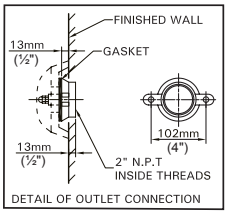

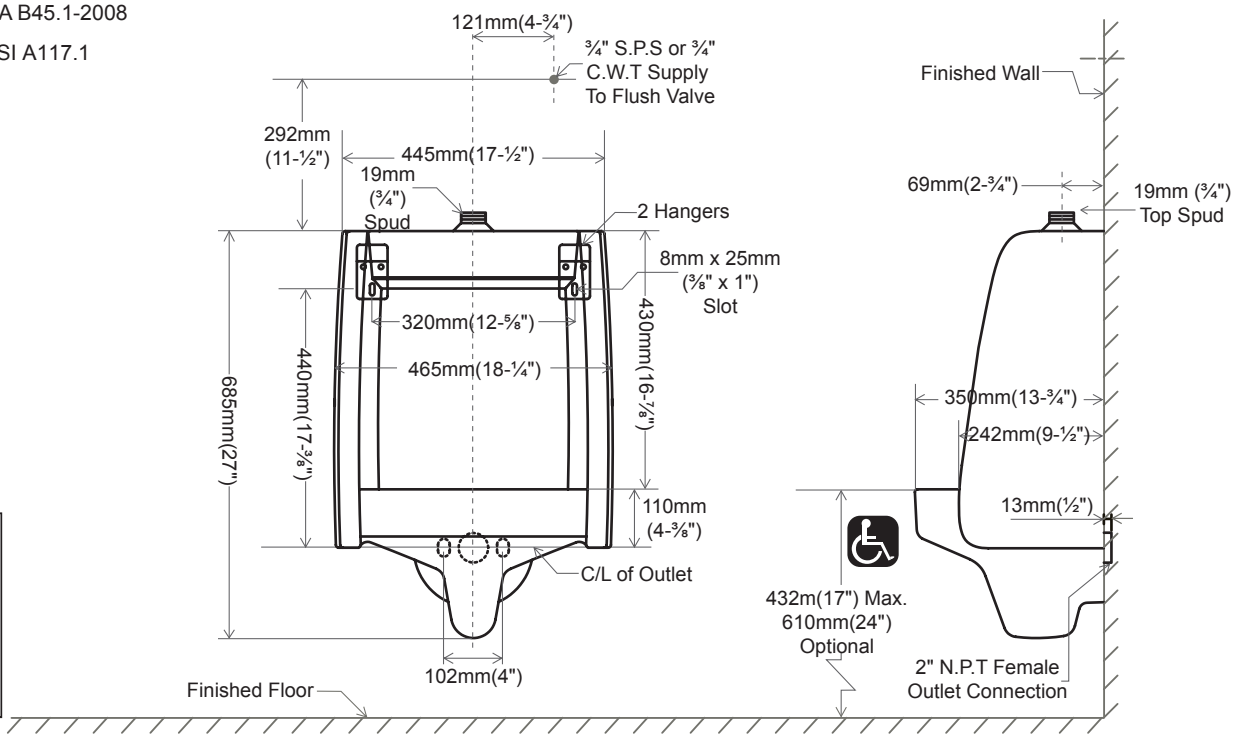

© 2013

HD Supply Facilities Maintenance, Ltd.
● 10641 Scripps Summit Court ,San Diego, CA 92131 ● 1-800-431-3000
hdsupplysolutions.com